NWM KEIM 100

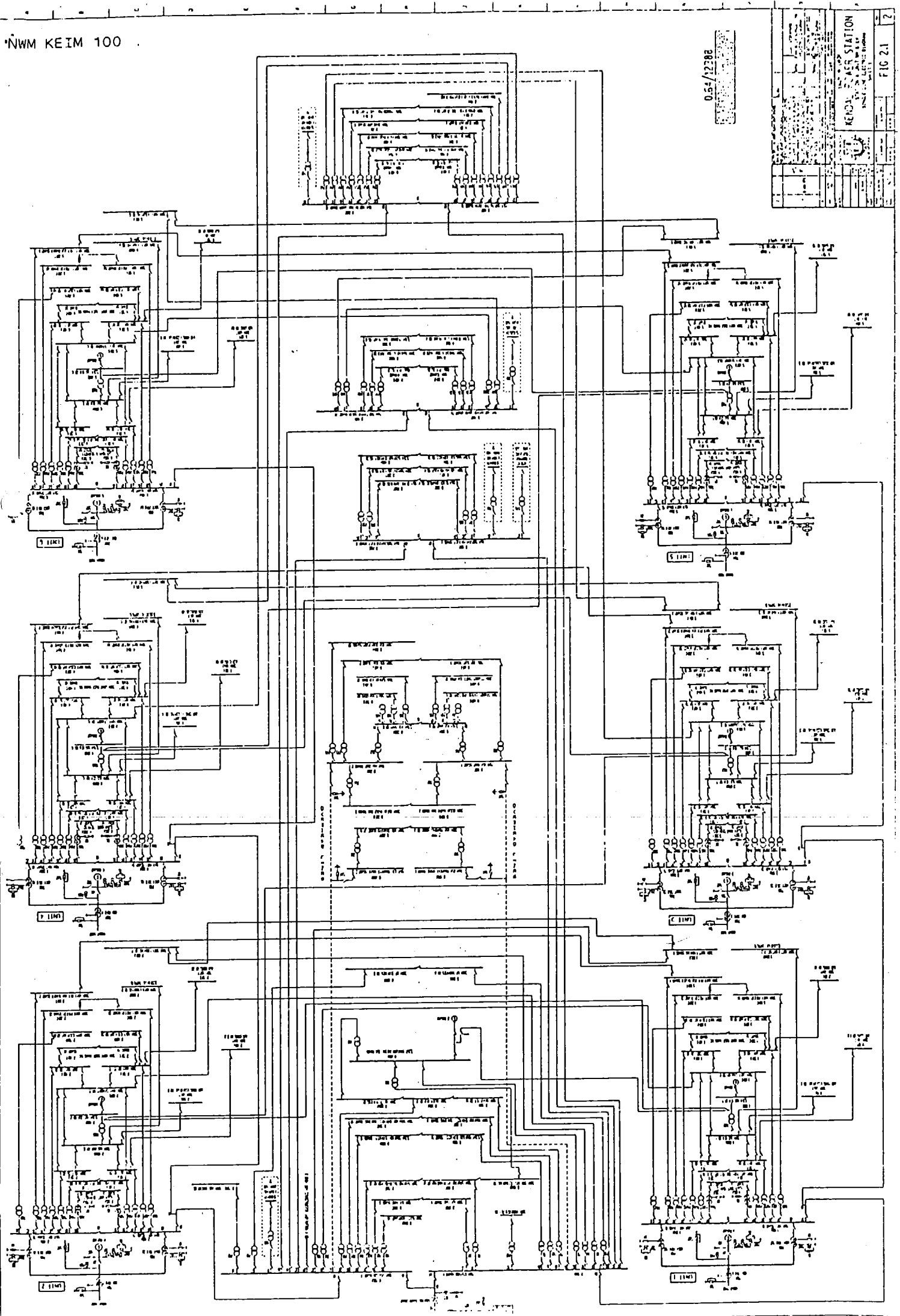

NWM KEIM 100

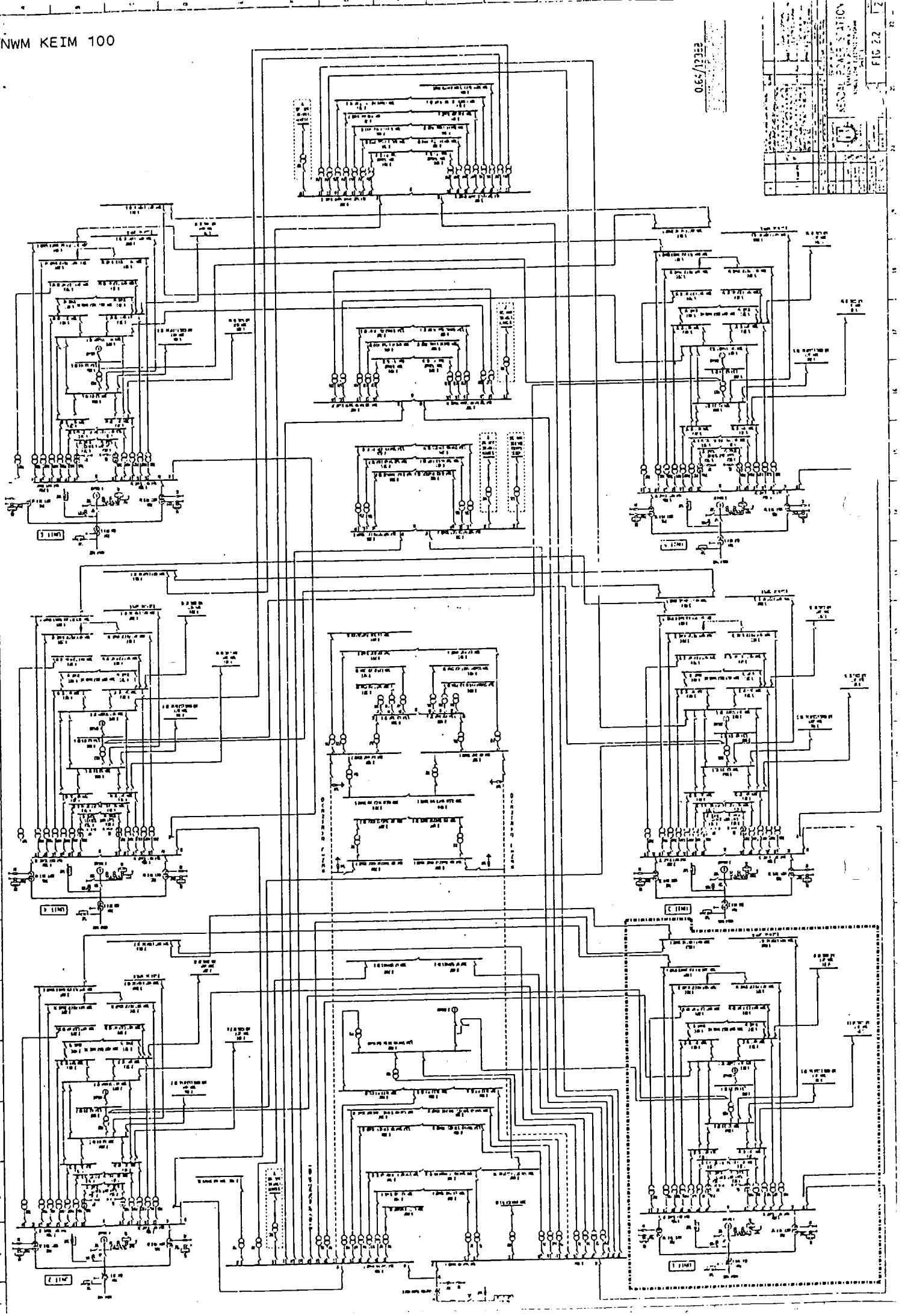

NWM KEIM 100

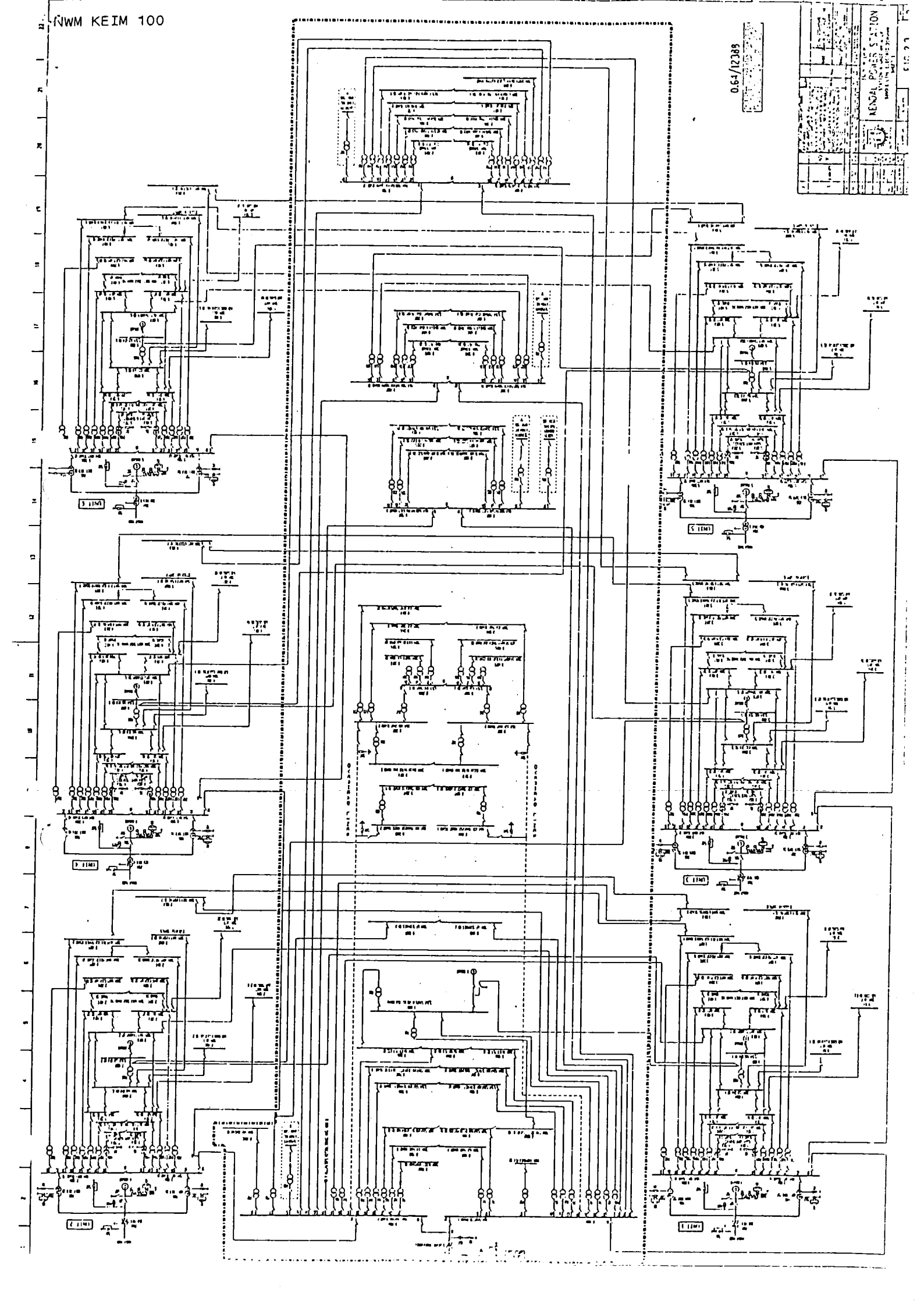

NWM KEIM 100

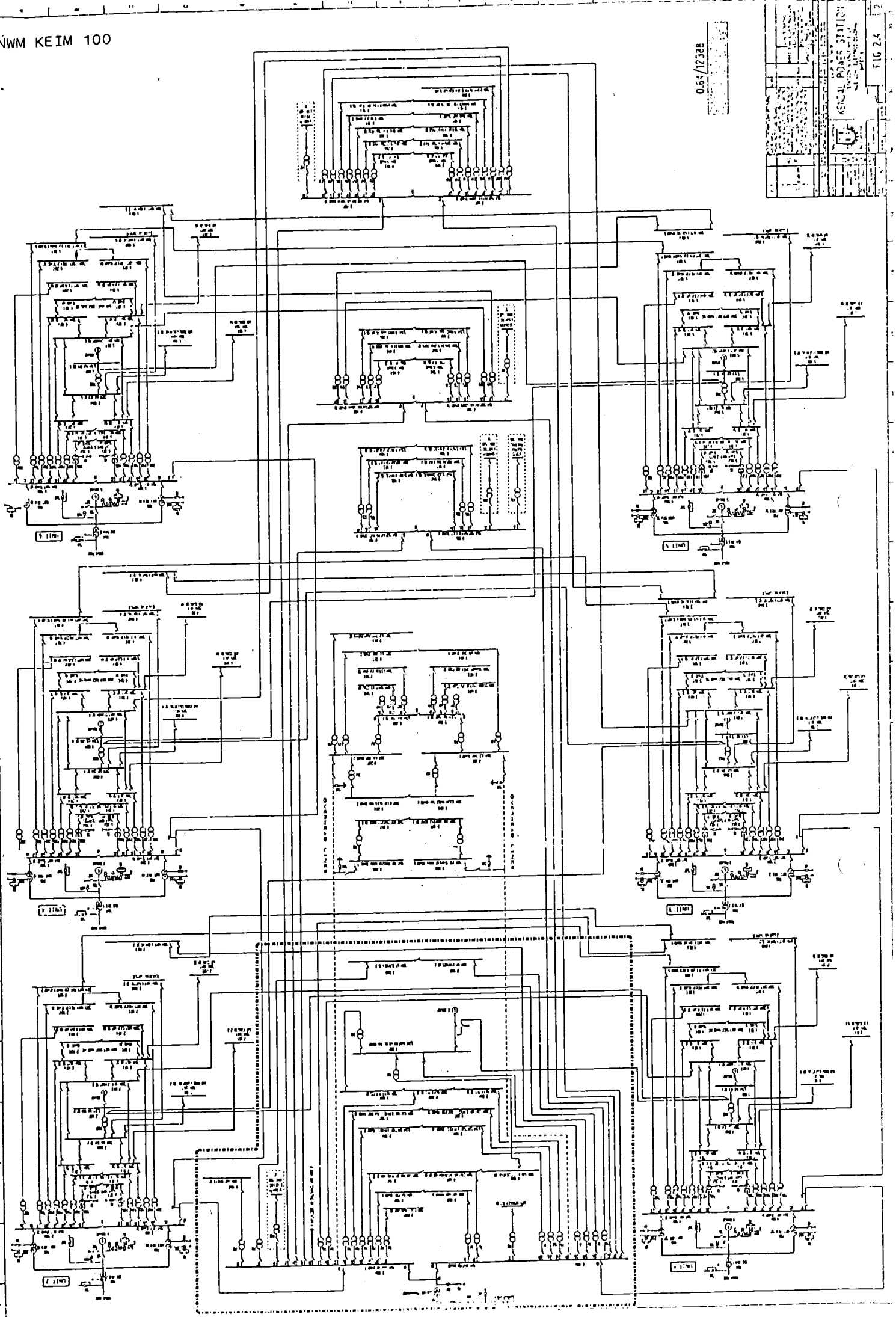

VWM KEIM 100

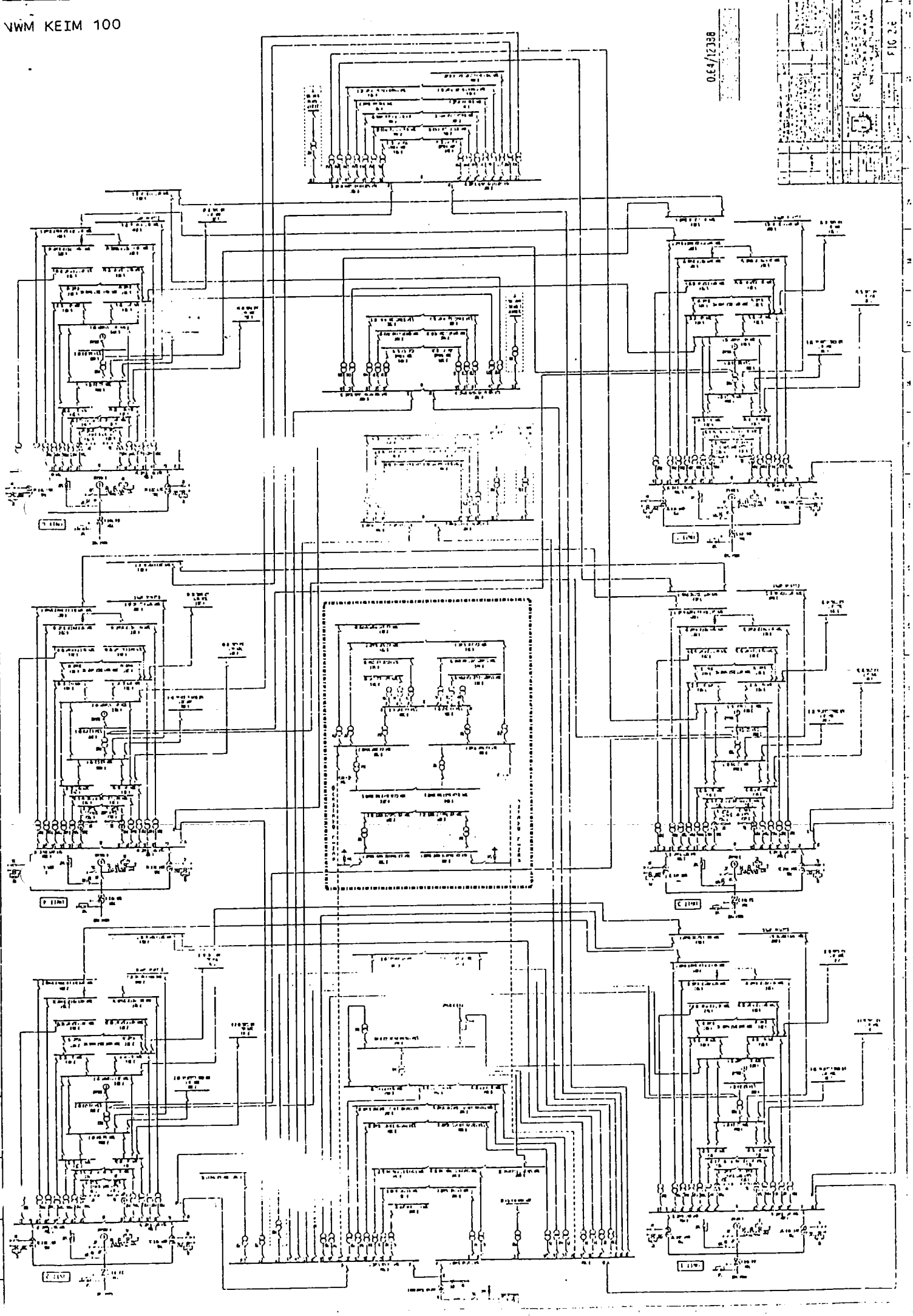

NWM KEJM 100

0.64/12388

KENDAL POWER STATION

FIG 2.5

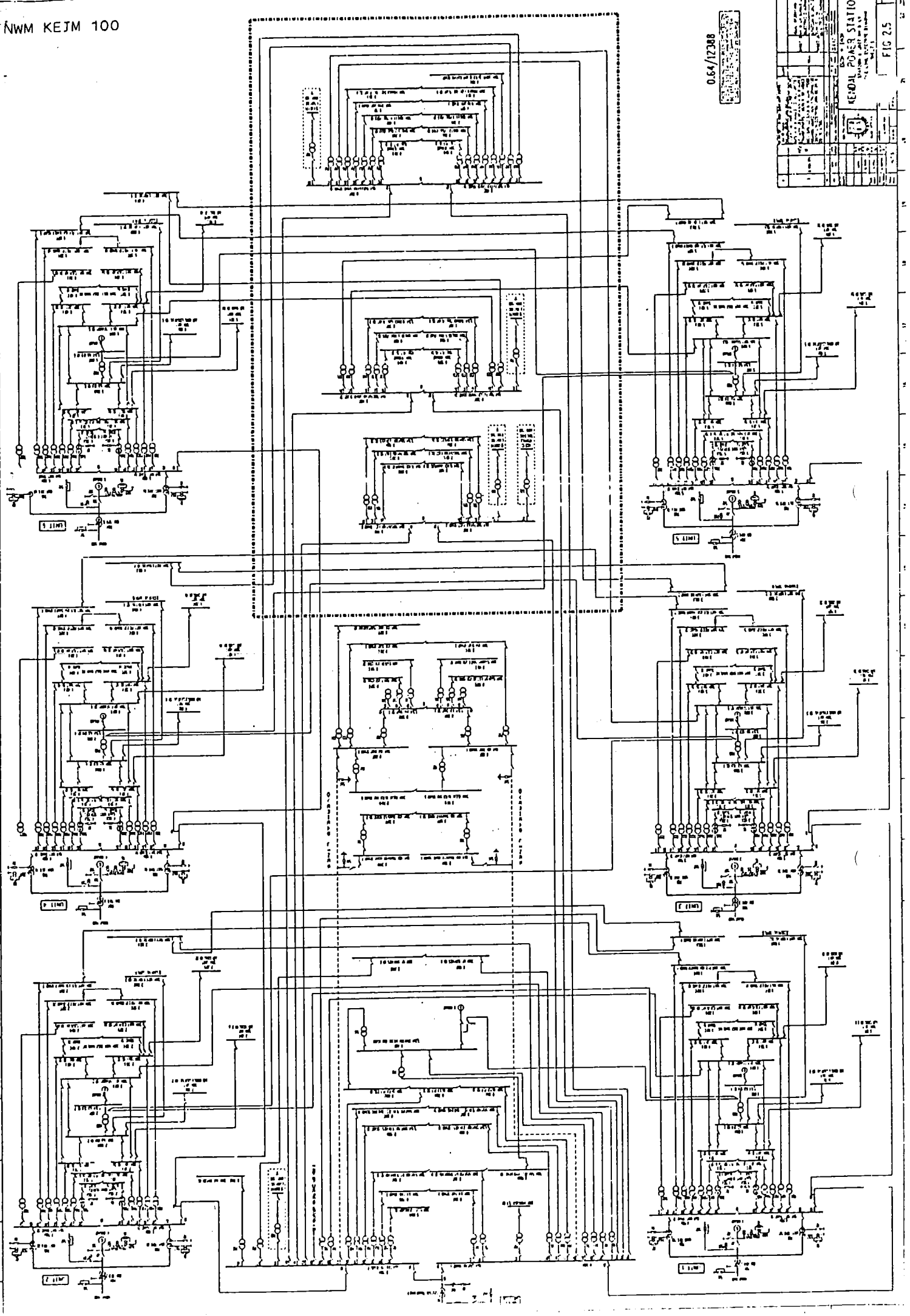

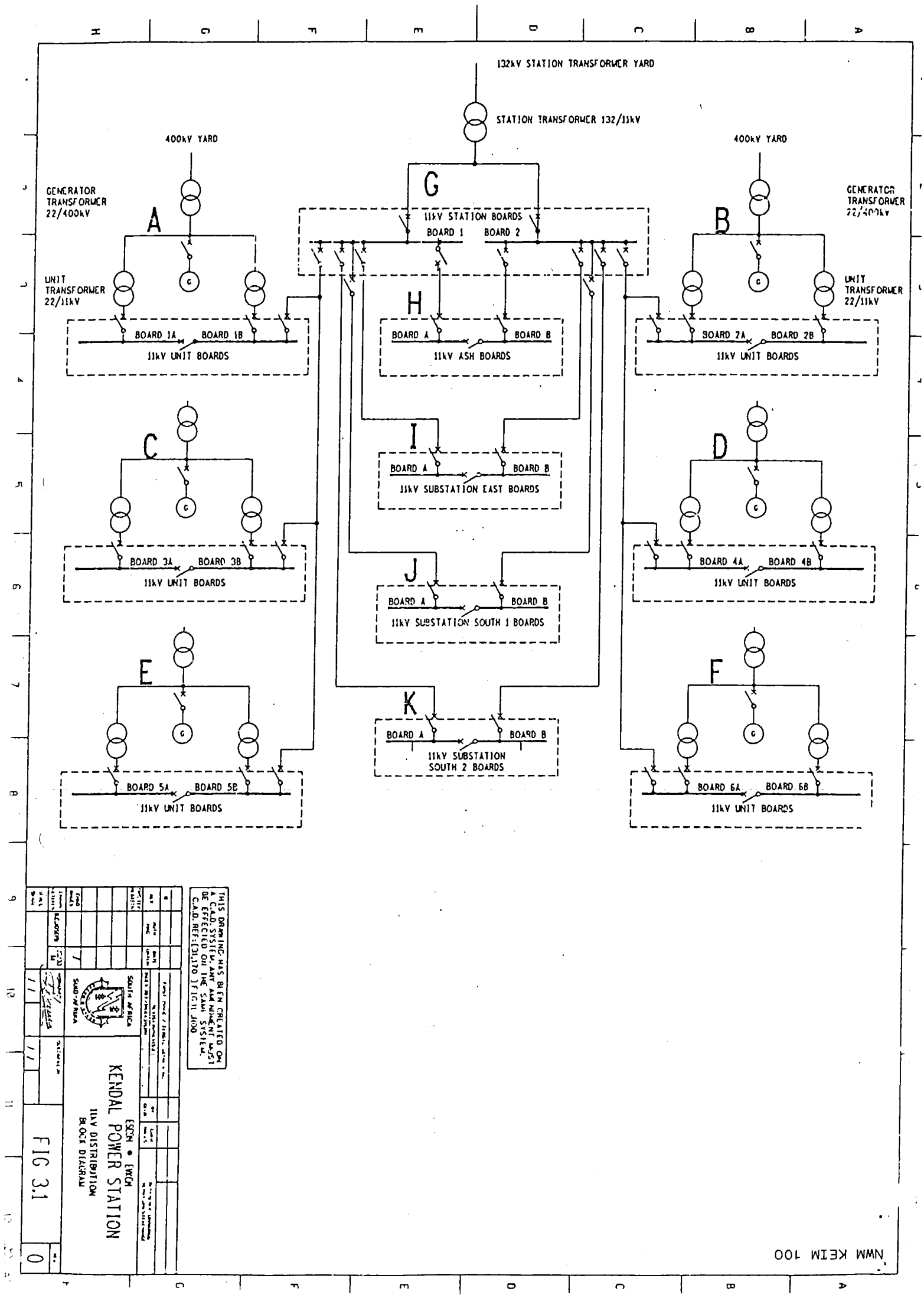
132kV STATION TRANSFORMER YARD
STATION TRANSFORMER 132/11kV
400kV YARD
400kV YARD
GENERATOR TRANSFORMER 22/400kV
GENERATOR TRANSFORMER 22/400kV
UNIT TRANSFORMER 22/11kV
UNIT TRANSFORMER 22/11kV
A
B
C
D
E
F
G
H
I
J
K
11kV STATION BOARDS
BOARD 1
BOARD 2
BOARD 1A
BOARD 1B
11kV UNIT BOARDS
BOARD A
BOARD B
11kV ASH BOARDS
BOARD 2A
BOARD 2B
11kV UNIT BOARDS
BOARD A
BOARD B
11kV SUBSTATION EAST BOARDS
BOARD 3A
BOARD 3B
11kV UNIT BOARDS
BOARD 4A
BOARD 4B
11kV UNIT BOARDS
BOARD A
BOARD B
11kV SUBSTATION SOUTH 1 BOARDS
BOARD A
BOARD B
11kV SUBSTATION SOUTH 2 BOARDS
BOARD 5A
BOARD 5B
11kV UNIT BOARDS
BOARD 6A
BOARD 6B
11kV UNIT BOARDS
THIS DRAWING HAS BEEN CREATED ON A C.A.D. SYSTEM. ANY AMENDMENT MUST BE EFFECTED ON THE SAME SYSTEM.
C.A.D. REF: [31,170] FIG 11 J100
SOUTH AFRICA
SUID-AFRIKA
ESCOM • EWCM
KENDAL POWER STATION
11kV DISTRIBUTION BLOCK DIAGRAM
FIG 3.1
0
NWM KEIM 100

NWM KEIM 100

0.64/12388

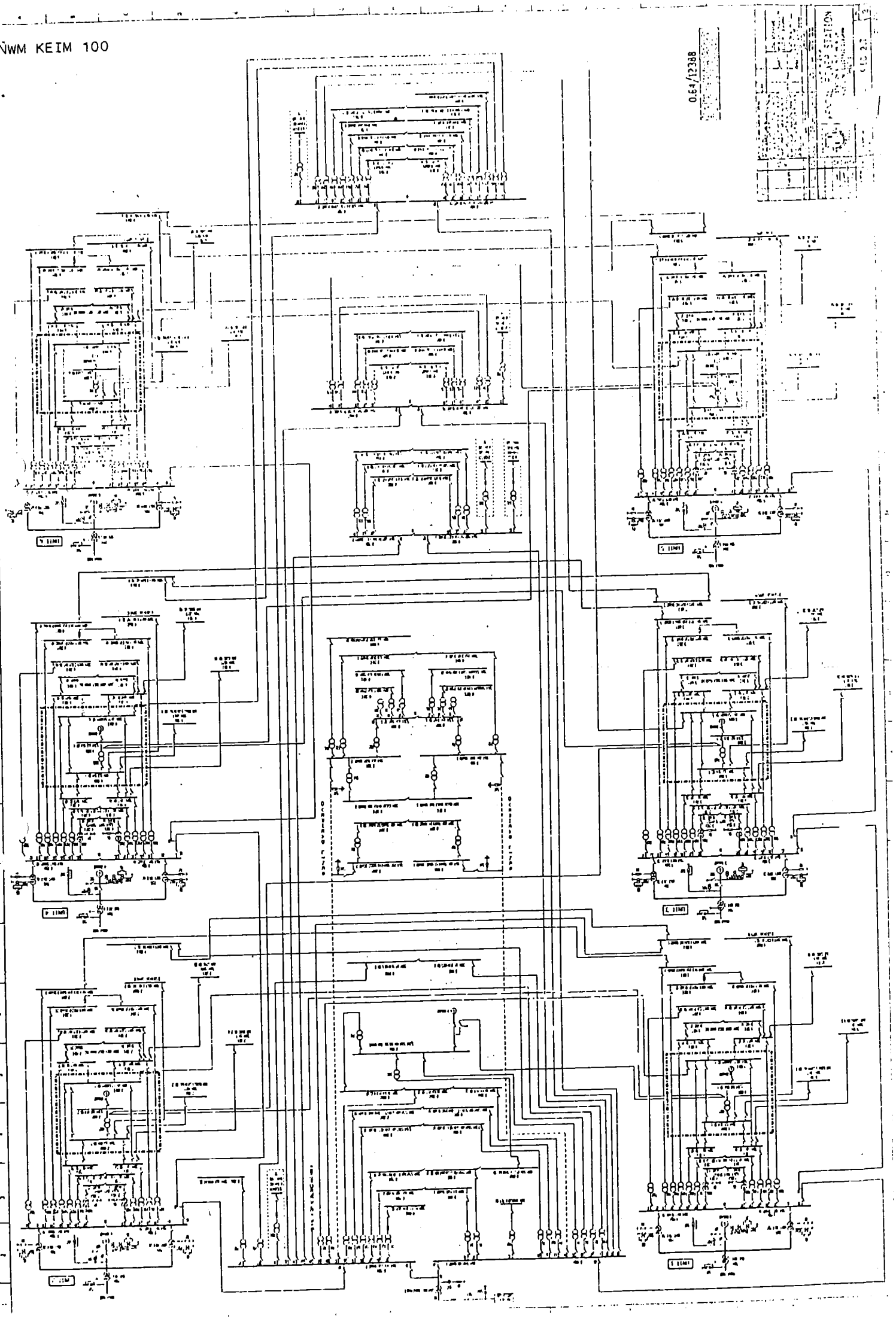

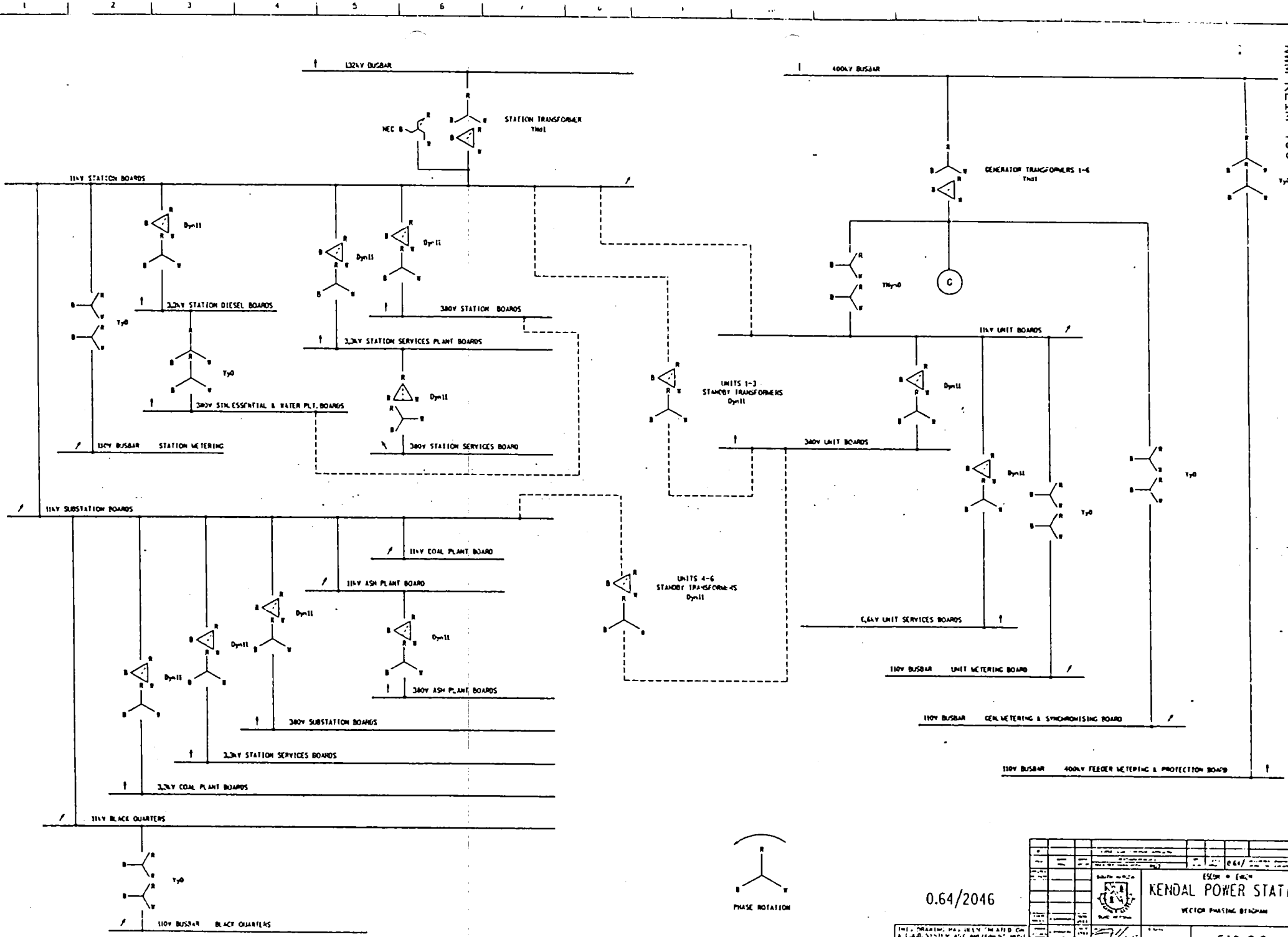
NMM KEIM 100
132kV BUSBAR
STATION TRANSFORMER
Yna1
11kV STATION BOARDS
Dyn11
3,3kV STATION DIESEL BOARDS
Yy0
380V STN.ESSENTIAL & WATER PLT.BOARDS
11kV BUSBAR STATION METERING
3,3kV STATION SERVICES PLANT BOARDS
380V STATION BOARDS
380V STATION SERVICES BOARD
11kV SUBSTATION BOARDS
11kV COAL PLANT BOARD
11kV ASH PLANT BOARD
380V ASH PLANT BOARDS
380V SUBSTATION BOARDS
3,3kV STATION SERVICES BOARDS
3,3kV COAL PLANT BOARDS
11kV BLACK QUARTERS
110V BUSBAR BLACK QUARTERS
UNITS 1-3
STANDBY TRANSFORMERS
Dyn11
UNITS 4-6
STANDBY TRANSFORMERS
Dyn11
400kV BUSBAR
GENERATOR TRANSFORMERS 1-6
Yna1
Yy0
11kV UNIT BOARDS
380V UNIT BOARDS
6,6kV UNIT SERVICES BOARDS
110V BUSBAR UNIT METERING BOARD
110V BUSBAR GEN METERING & SYNCHRONISING BOARD
110V BUSBAR 400kV FEEDER METERING & PROTECTION BOARD
PHASE ROTATION
0.64/2046
KENDAL POWER STATION
VECTOR PHASING DIAGRAM
N.T.S.
FIG 3.3
0

NWM KEIM 100

0.64/12388

FIG 32

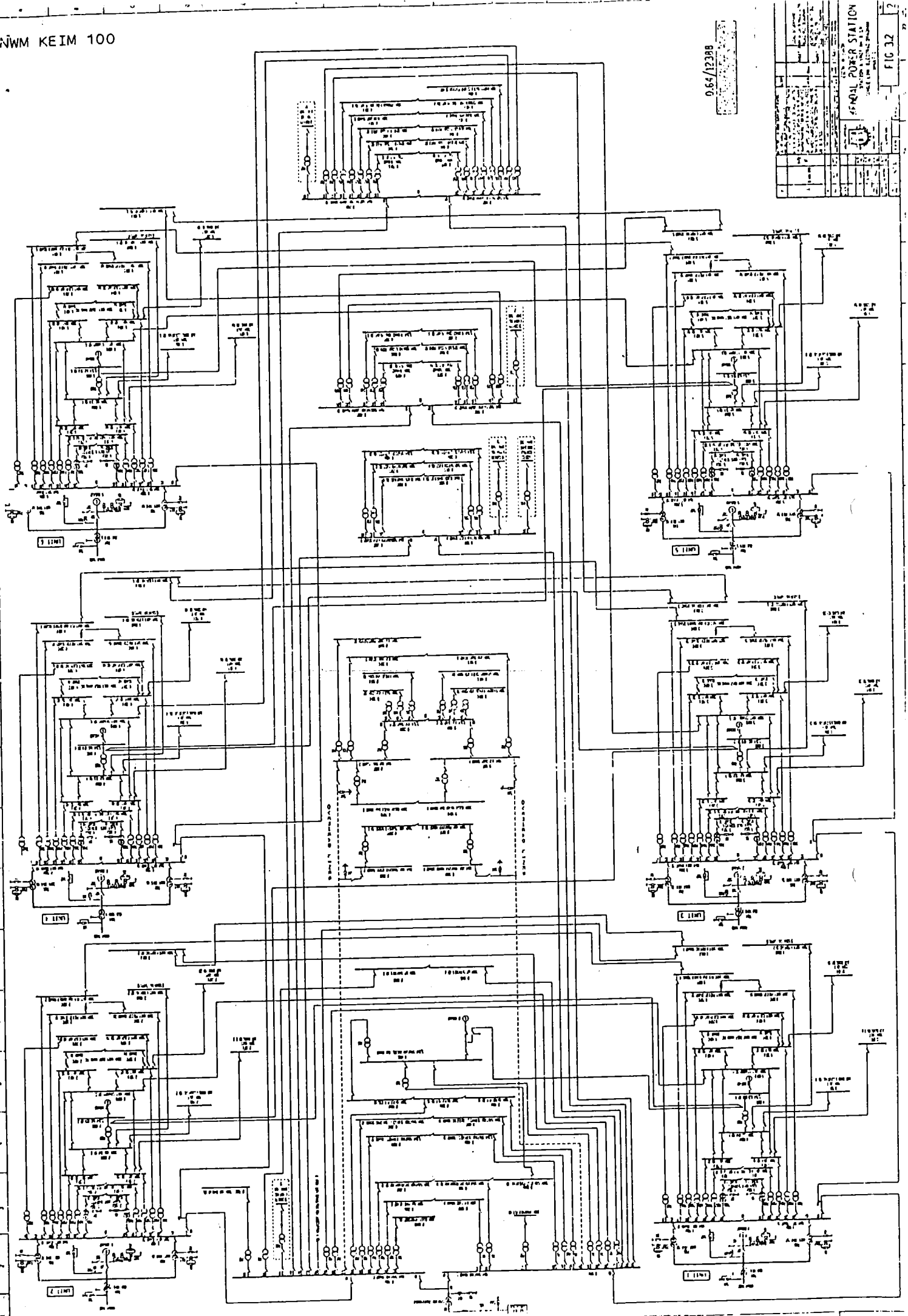

M KEIM 100

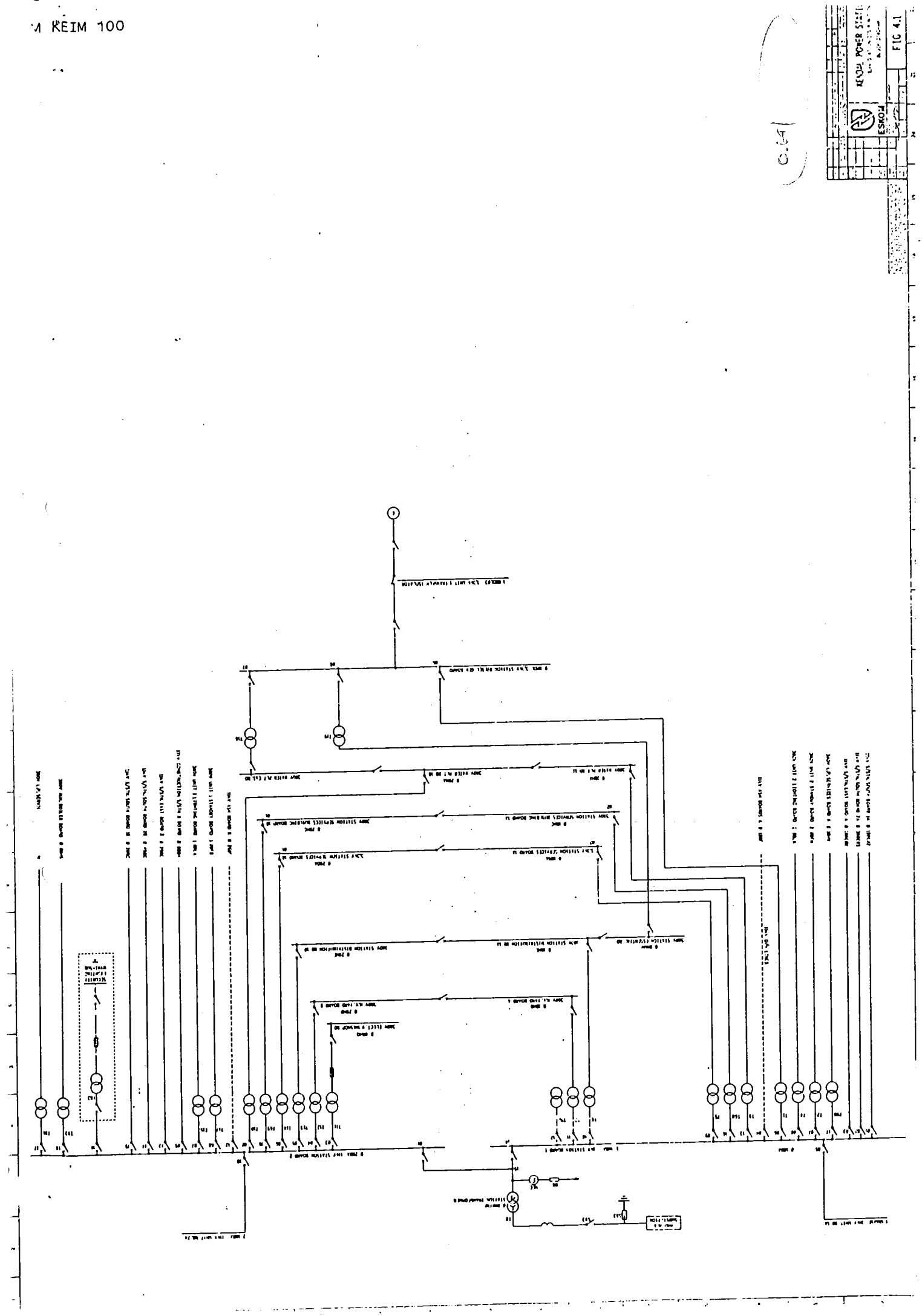

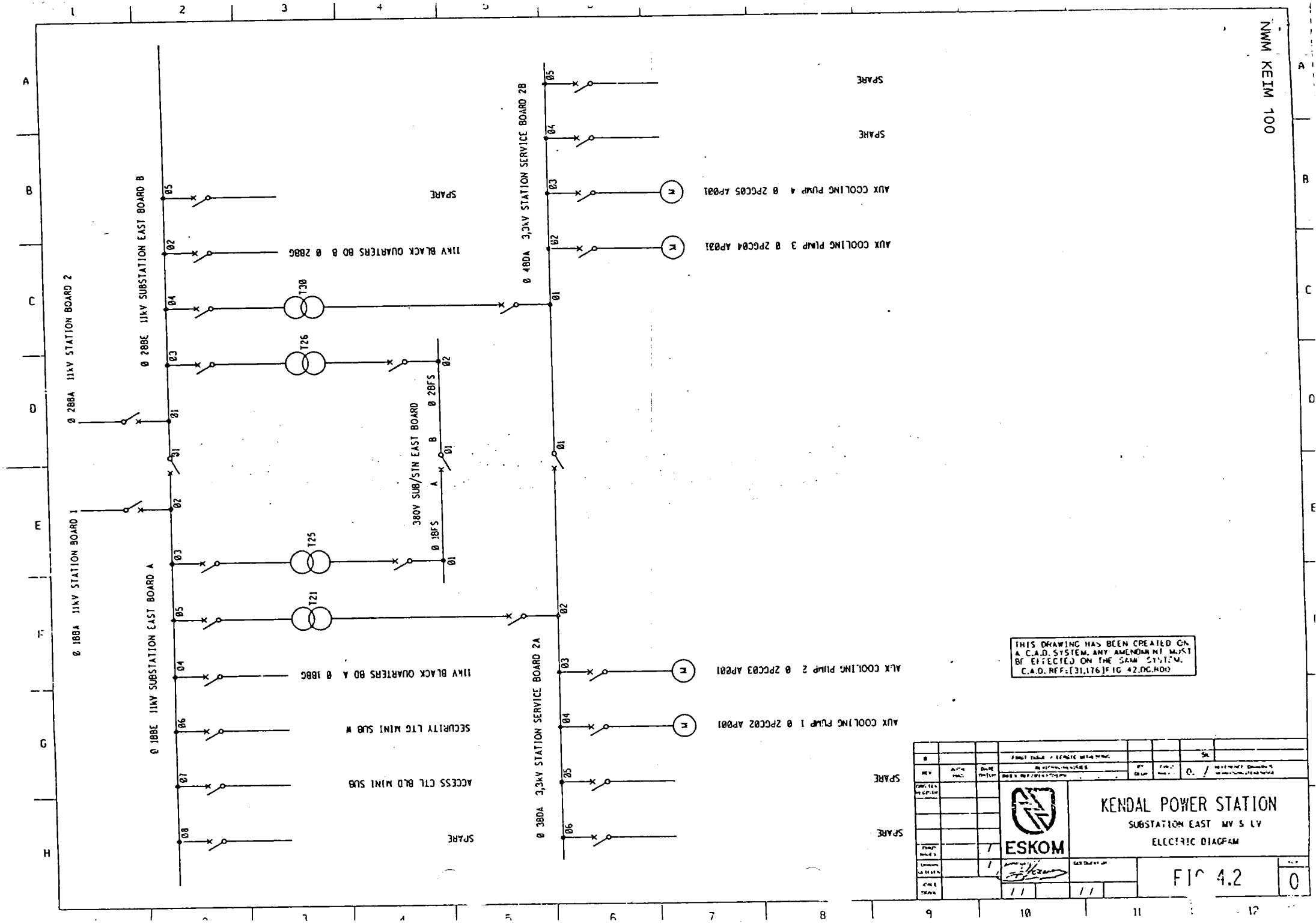
NWM KEIM 100
Ø 28BA 11kV STATION BOARD 2
Ø 28BE 11kV SUBSTATION EAST BOARD B
11kV BLACK QUARTERS BD B Ø 28BC
SPARE
Ø 48DA 3,3kV STATION SERVICE BOARD 2B
AUX COOLING PUMP 4 Ø 2PCC05 AP031
AUX COOLING PUMP 3 Ø 2PCC04 AP031
SPARE
T30
T26
380V SUB/STN EAST BOARD
Ø 28FS
Ø 18FS
Ø 18BA 11kV STATION BOARD 1
Ø 18BE 11kV SUBSTATION EAST BOARD A
11kV BLACK QUARTERS BD A Ø 18BC
SECURITY LTG MINI SUB M
ACCESS CTL BLD MINI SUB
SPARE
T25
T21
Ø 38DA 3,3kV STATION SERVICE BOARD 2A
AUX COOLING PUMP 2 Ø 2PCC03 AP001
AUX COOLING PUMP 1 Ø 2PCC02 AP001
SPARE
SPARE
THIS DRAWING HAS BEEN CREATED ON A C.A.D. SYSTEM. ANY AMENDMENT MUST BE EFFECTED ON THE SAME SYSTEM. C.A.D. REF:[31,176]FIG 42.DGN400
ESKOM
KENDAL POWER STATION
SUBSTATION EAST MV & LV
ELECTRIC DIAGRAM
FIG 4.2
0

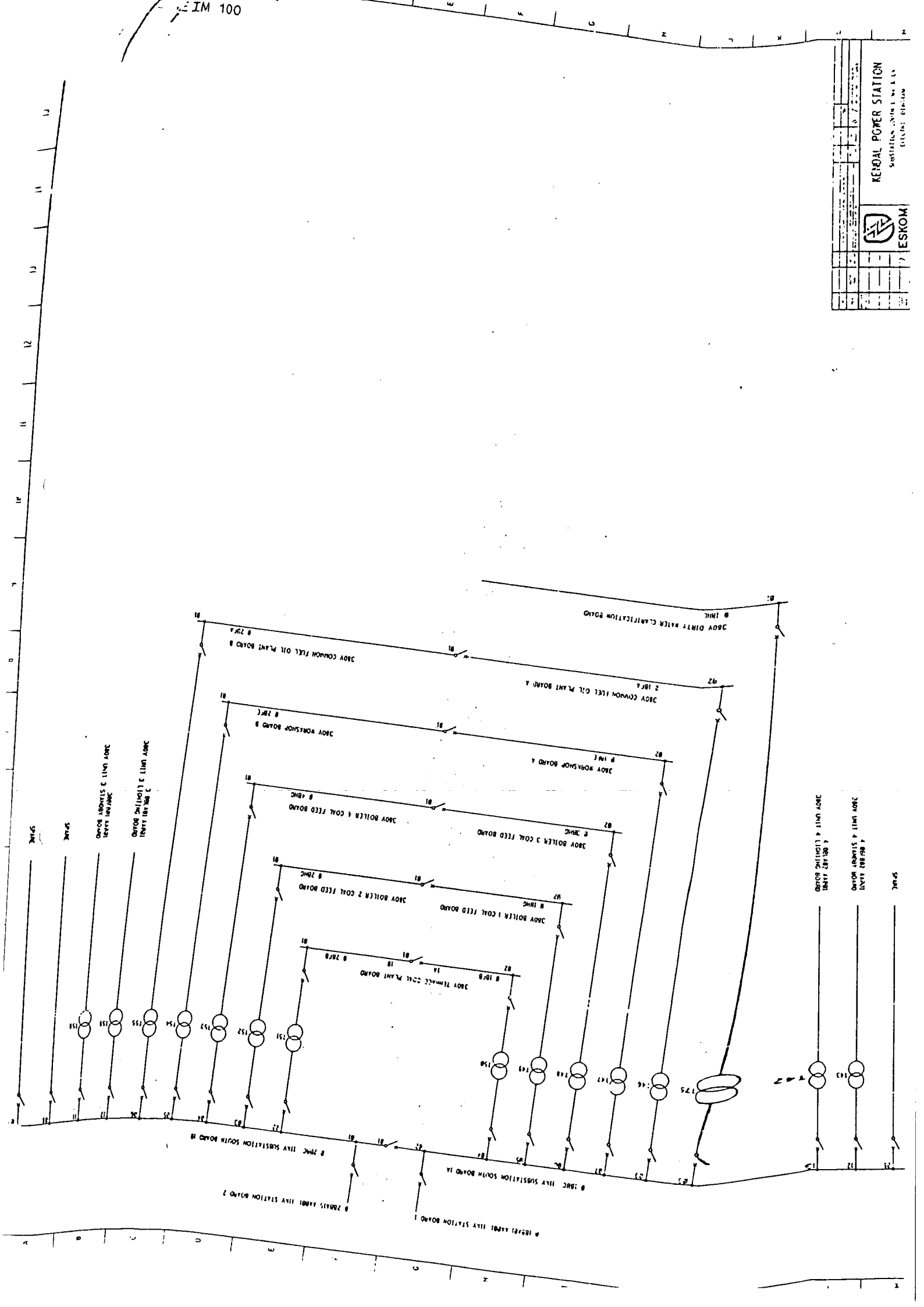
KENDAL POWER STATION
ESKOM

NWM KEIM 100

KENDAL POWER STATION

ESKOM

IG 4.4

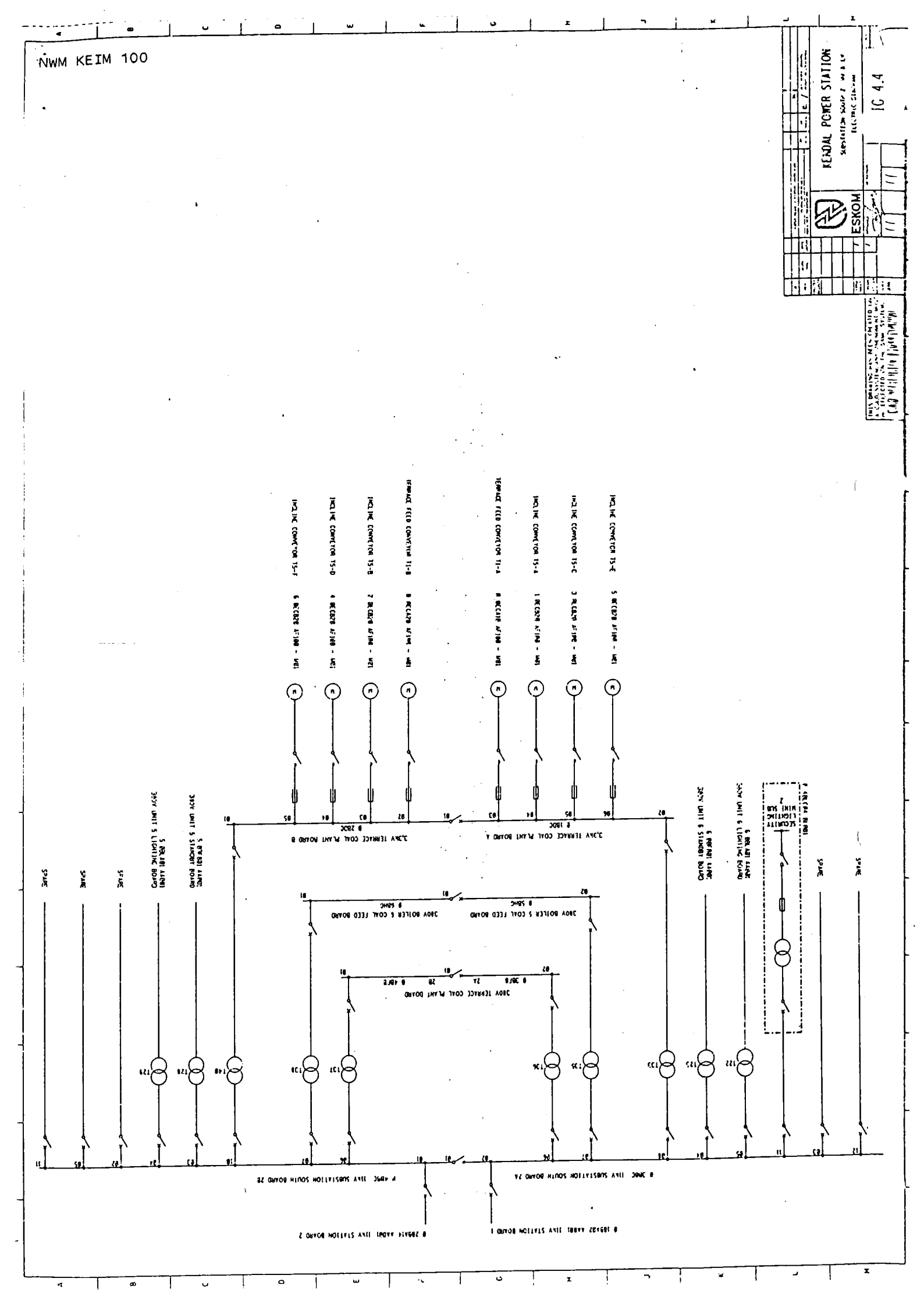

NWM KEIM 100

KENGAL POWER STATION

ESKOM

FIG 4.5

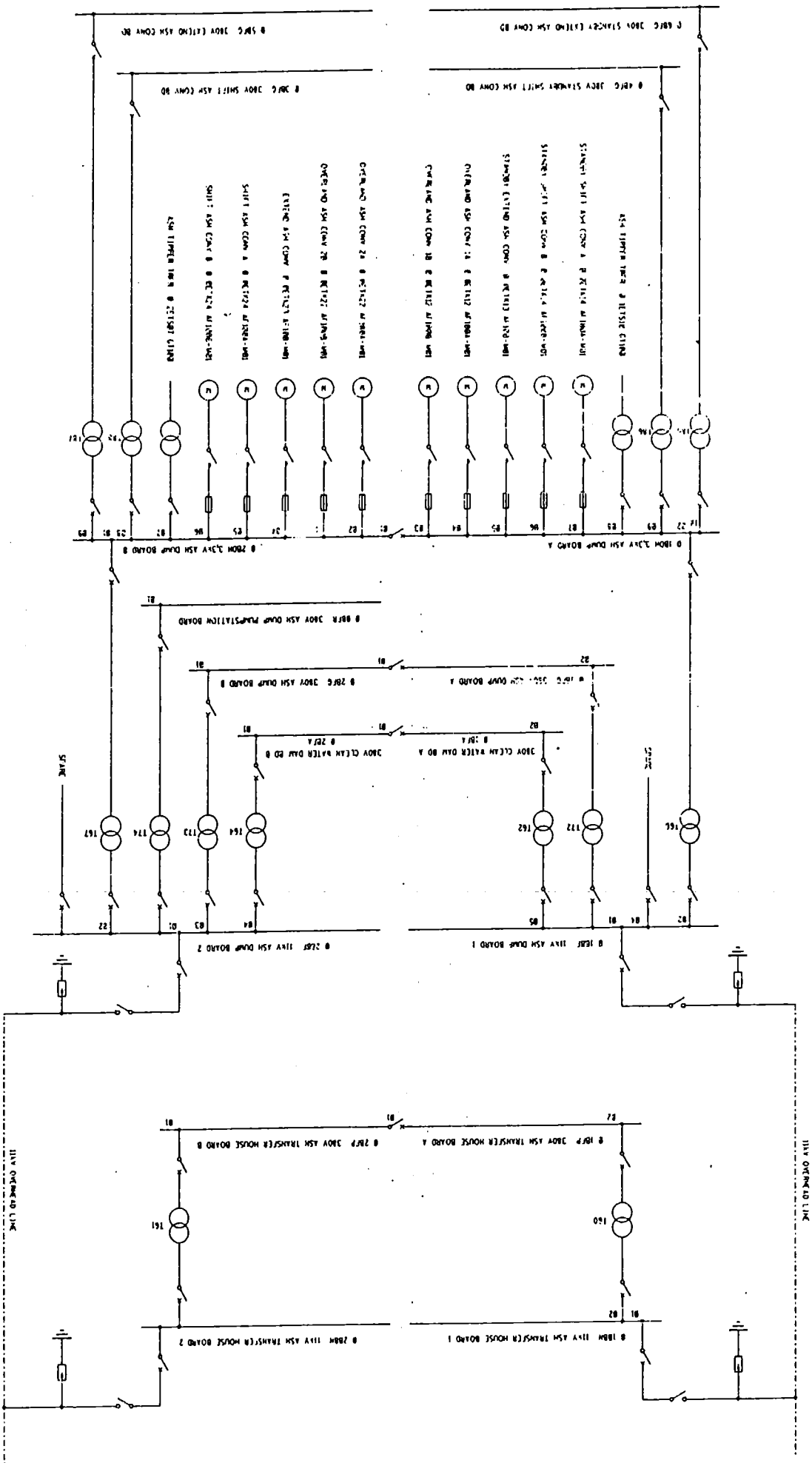

NWM KEIM 100

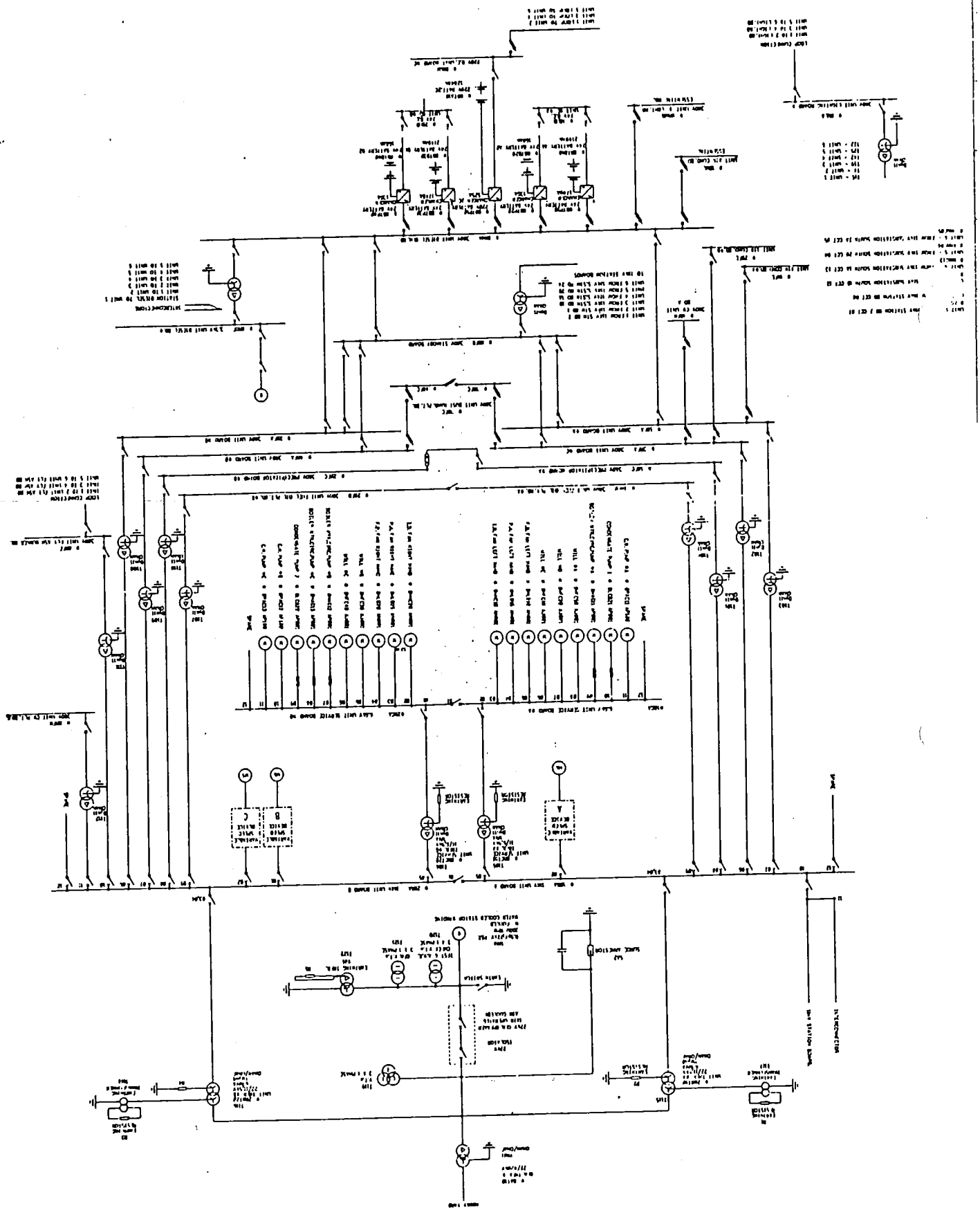

M KEIM 100

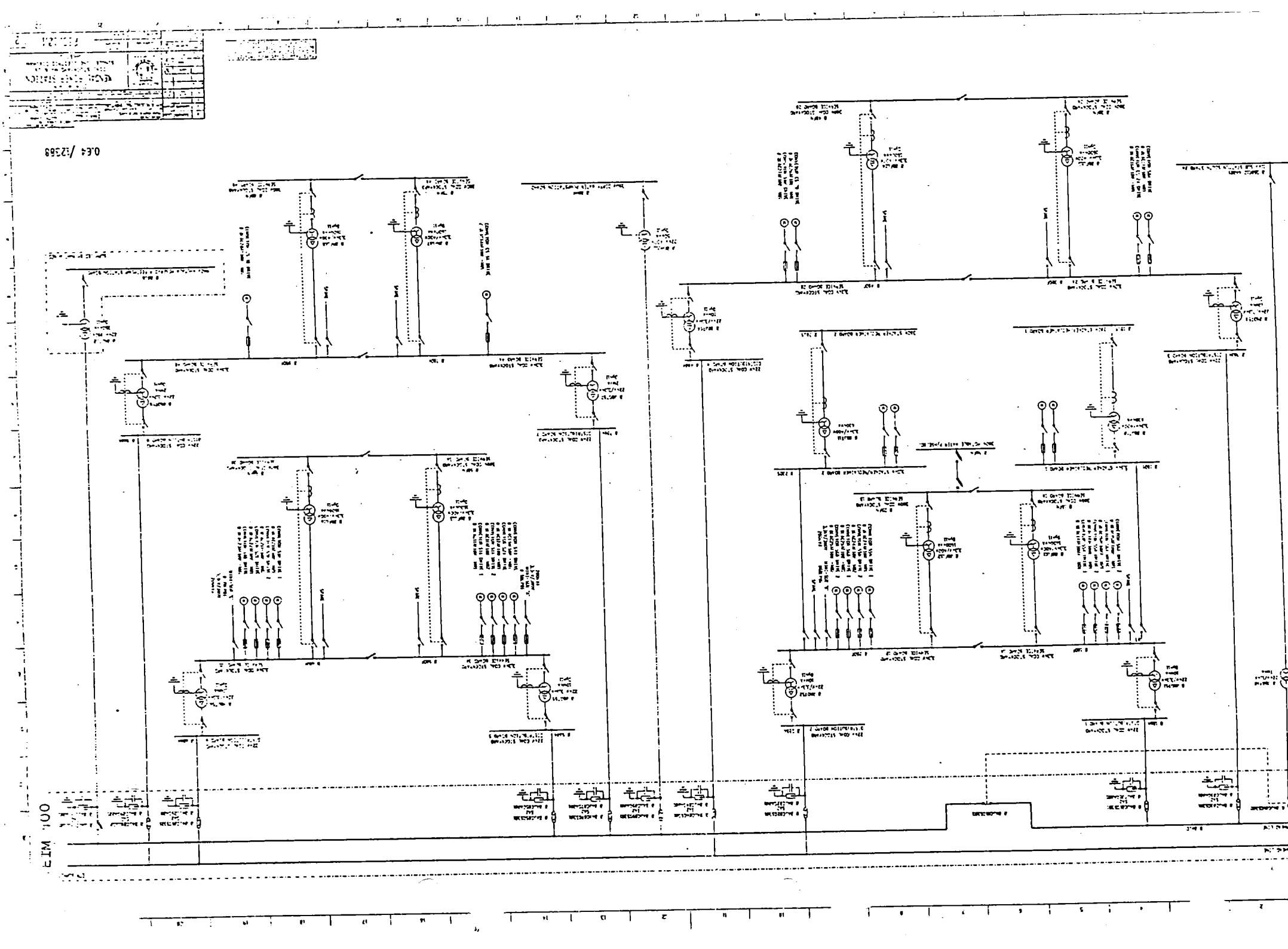

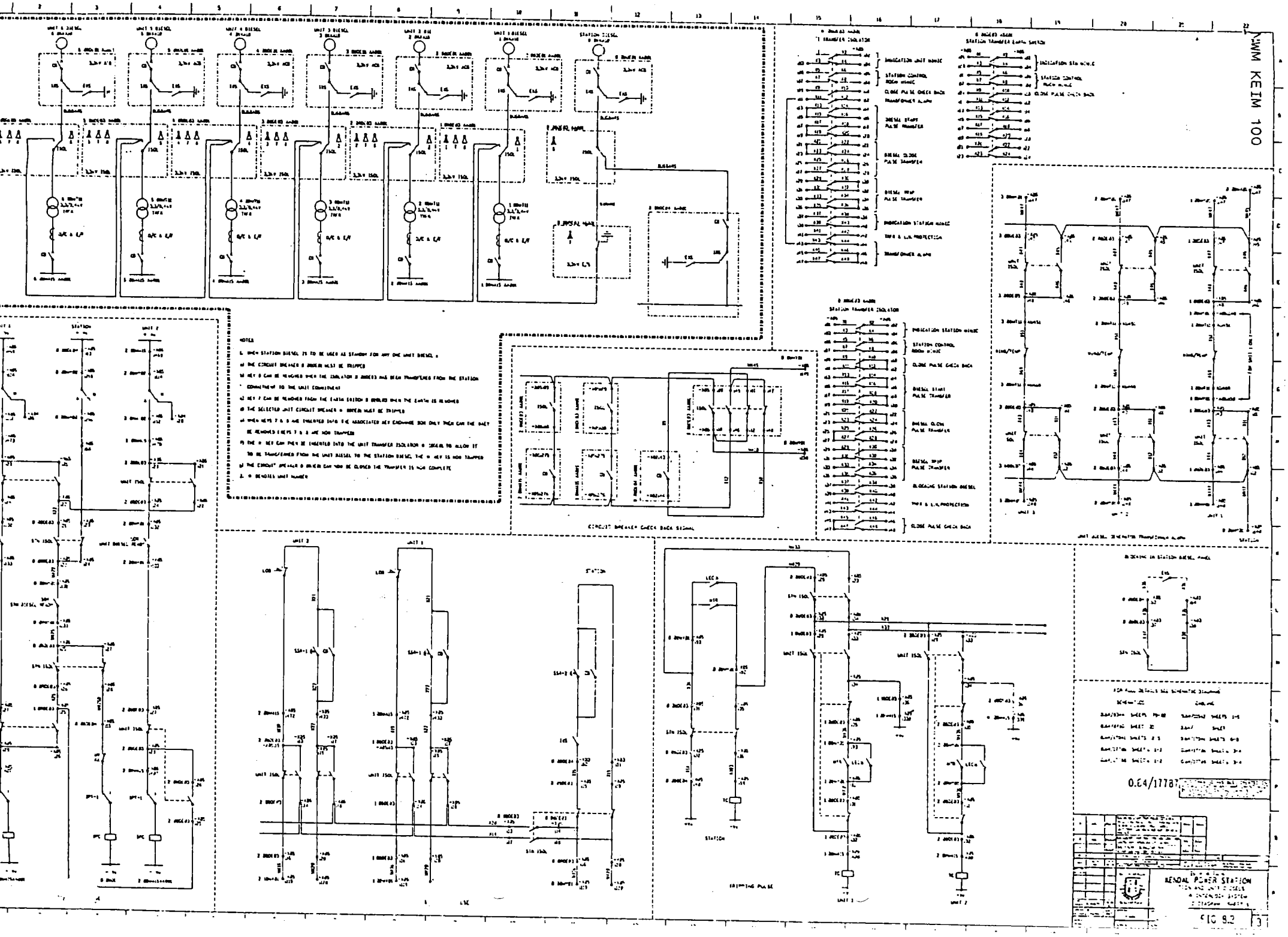
WM KEIM 100
NOTES
CIRCUIT BREAKER CHECK BACK SIGNAL
TRIPPING PULSE
0.64/17787
KENDAL POWER STATION
FIG 8.2

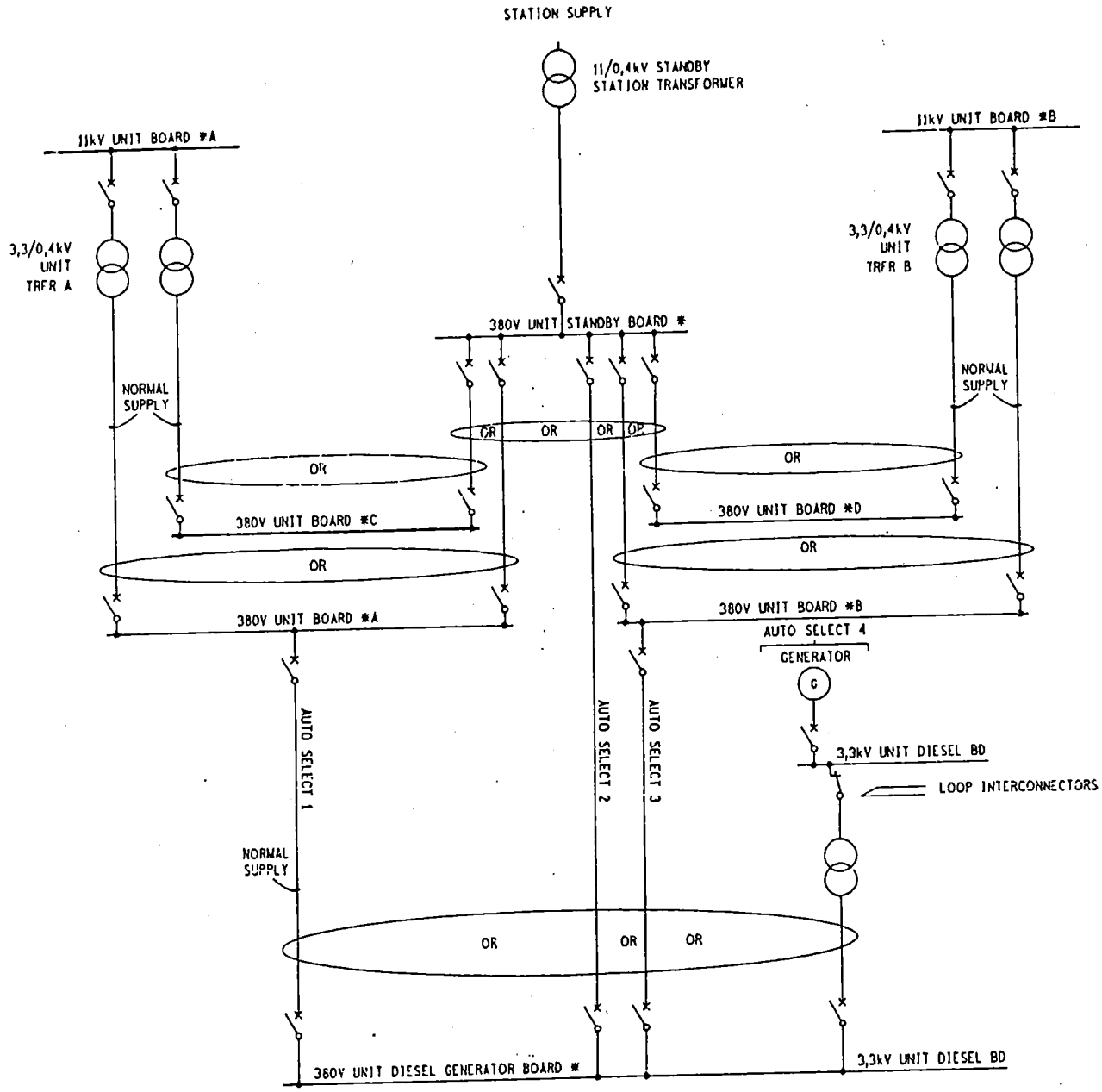

THIS DRAWING HAS BEEN CREATED ON A C.A.D. SYSTEM. ANY AMENDMENT MUST BE EFFECTED ON THE SAME SYSTEM. C.A.D. REF: [illegible]

SOUTH AFRICA
SUID-AFRIKA

ESCOM • ESKOM

KENDAL POWER STATION

INTERLOCK OPTIONS DESCRIBED IN 8.6.6 & 8.6.7

LOGIC DIAGRAM

(ONLY TO ILLUSTRATE ALTERNATIVE SUPPLY)

FIG 8.1

0

NWM KEIM 100

